LITHIUM POWERED

LI-ION TECHNOLOGY

HANGCHA provides Li-Ion battery (LiFePO4) with 5 years or 10000 hours warranty.

CHARGING 4000 CYCLES DISCHARGE

5 YEARS WARRANTY

INNOVATIVE SOLUTIONS NEW POWER NOW

Innovative, reliable lithium-ion technology (Lithium Iron-Phosphate), which are developed jointly by HANGCHA and CATL. Battery cells and modules are from CATL, with reliable quality, exclusively for HANGCHA.

/ We use square lithium iron phosphate batteries and modules used in large quantities by commercial vehicles in mature economies.
/ The module uses an aluminum alloy frame which is sturdy, lightweight and with excellent heat dissipation.
/ Safe and effective: Charging efficiency as high as 98%, thermal runaway temperature 600 ℃ or above.
/ Adapted to low temperatures: Comes standard with an electrical heating feature , ensuring normal operation in low temperatures.
/ Quick charging: Can charge and operate at the same time, fully charged in 2hours.
/ Long-working: 4000 charging cycles, capacity retention greater than 80%.
/ Maintenance-free: Battery does not require manual maintenance.
/ Green and clean: Pollution-free, zero emissions.

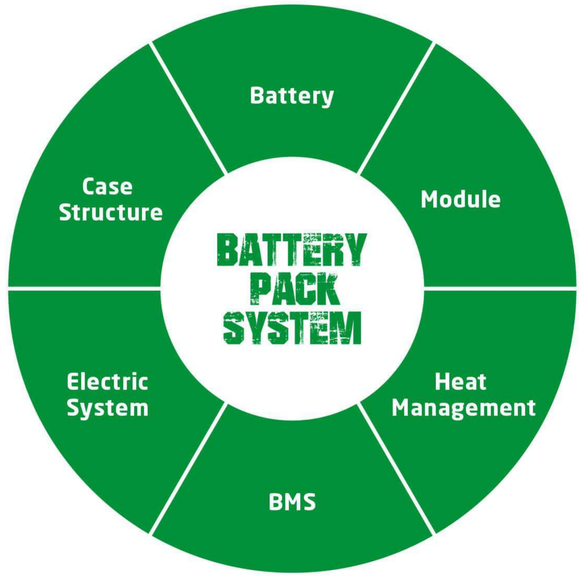

Li-Ion
2 hours 100%

Lead-acid batteries
8-10 hours 100%

Rapid charging and opportunity charging ensure continuous availability of vehicles

Li-Ion powered forklifts are always available. They allow for fast full charging or boost charging (100 % charge in 2 hours).
They are maintenance free and do not require a battery change when used for multi-shift operations.

TITANS CHARGER

Li-Ion Battery Pack specification

Type		CPD10-AC4-I CPD10-AD2-I	CPD15-AC4-I CPD15-AD2-I	CPD18-AC4-I CPD18-AD2-I	CPD20-AC4-I CPD20-AD2-I	CPD25-AC4-I CPD25-AD2-I	CPD25-ALC4-I CPD25-ALD2-I	CPD30-AC4-I CPD30-AD2-I	CPD35-AC4-I CPD35-AD2-I
Battery voltage, capacity	V/Ah	80/202	80/202	80/202	80/271	80/271	80/404	80/404	80/404
Titans charger		SLC-80100	SLC-80100	SLC-80100	SLC-80100	SLC-80100	SLC-80200	SLC-80200	SLC-80200

Appearance

Applied advanced new designing method, world famous designing company designed, make the eye catchable stream outline of the truck chassis. Small dimension, simple appearance, and metal material applied for the exposed parts, all provide robust construction of the A series.

Power Train

Stability

Advanced parallel layout of drive motor and lower located battery up to chassis bottom provide good stability to the truck.

Intelligent

/ First-class R&D and testing facility.
/ First-class production quality management system.
/ First-class manufacturing facility.
/ First-class environment and control.

Comfortable Operation

Ergonomic

The new designed steering wheel\ new brake system and the easy-to-operate levers provide total handling operation.

Seat

The extra foot space is provided to reduce operator fatigue significantly. The new wide-open, non-slip step makes getting in and out easy and safe.

Soft landing

In addition to the soft landing system, the soft lifting system is adopted (front lifting cylinders of triplex mast and full free dup-lex mast) , as a result, the noise and shock of the mast significantly decreases.

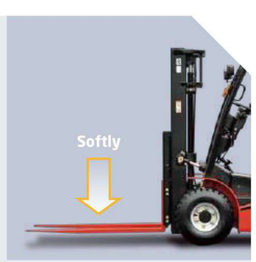

Wide view mast

New designed wide view mast provides better forward view ability.

Advanced

High frequency MOSFET controller provides accurate control of travelling, lifting, and better adjustable performance, and better matches the motor. Regenerative braking, reverse current braking and anti-slide on slop function guarantee the operation safety.

Multi functions big LED dashboard provides running hours, battery power, and self diagnosis functions, and with high accuracy even in bad environment.

Regenerative braking is more energy saving and efficiency during truck's deceleration, direction changing, and driving on downwards slope.

C3/C4 system

CURTIS big LED dashboard. Non-handset Operation

Imported high performance, and new generation AC controller

D2 system

HANGCHA dashboard

Inmotion GEN 6 controller

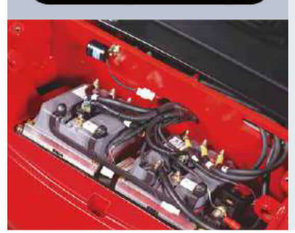

1. Low center of gravity provides good turning stability, and better operator's driving comfort. 150mm adjustable distance of seat provides better operator's comfort of different operators.
2. Soft landing system is applied for A series. When the forks lower to 60-100mm to ground, the soft landing system is auto operated, and to avoid the forks dashing against the ground. New designed broad view mast provides better forward visibility.
3. Easy to see LED dashboard provides friendly interaction.
4. Low noise, no exhaust emission, and low energy consumption, all meet environment friendly requirement.

Service Ability

Full open battery cover, easy for battery service easy opened counter weight cover, to protect internal controller to avoid water and dust World famous brand electronics are applied in motor controller, contactor, power plug, emergency switch, dashboard, and accelerators.

Overloaded protection system is applied for electronics and hydraulics.

CE certificate is available.

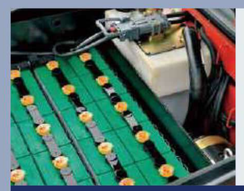

Battery cover with auto lock spring for easy battery service and replacing, and clean the oil tank

Side battery changing solution is applied for heavy and long time application

Big dimension anti-slide rubber pad

Protective roof

Easy opened counterweight cover is to protect the internal controllers to avoid water and dust

A Series 1.0-3.5t Electric Forklift Specification

Distinguishing mark	1.1	Manufacturer		HANGCHA GROUP CO.,LTD.							
	1.2	Manufacturers type designation		CPD10-AC3	CPD15-AC3	CPD18-AC3	CPD20-AC3	CPD25-AC3	CPD25-ALC3	CPD30-AC3	CPD35-AC3
	1.3	Drive: electric (battery or mains), diesel, petrol, fuel gas		electric	electric	electric	electric	electric	electric	electric	electric
	1.4	Operator type: hand, pedestrian, standing, seated, order-picker		seated	seated	seated	seated	seated	seated	seated	seated
	1.5	Load capacity/rated load	Q (kg)	1000	1500	1800	2000	2500	2500	3000	3500
	1.6	Load centre distance	c (mm)	500	500	500	500	500	500	500	500
	1.8	Load distance, centre of drive axle to fork	x (mm)	406	406	411	448	448	448	480	485
	1.9	Wheelbase	y (mm)	1380	1380	1380	1485	1485	1625	1625	1625
Weight	2.1	Service Weight	kg	2940	2940	3090	3880	4180	4380	4850	5300
	2.2	Axle loading, laden front/rear	kg	3120/820	3900/540	4300/590	5196/684	5920/760	6140/740	7060/790	7950/850
	2.3	Axle loading, unladen front/rear	kg	1353/1587	1353/1587	1440/1650	1728/2152	1780/2400	1930/2450	2324/2526	2380/2920
Tyres, chassis	3.1	Tyres: solid rubber, superelastic, pneumatic, polyurethane		pneumatic	pneumatic	pneumatic	pneumatic	pneumatic	pneumatic	pneumatic	super elastic
	3.2	Tyre size, front		6.00 - 9	6.00 - 9	21x8 - 9	23x9 - 10	23x9 - 10	23x9 - 10	23x9 - 10	23x10 - 12
	3.3	Tyre size, rear		5.00 - 8	5.00 - 8	5.00 - 8	18x7 - 8	18x7 - 8	18x7 - 8	18x7 - 8	200/50-10
	3.5	Wheels, number front rear (x = driven wheels)		2x/2	2x/2	2x/2	2x/2	2x/2	2x/2	2x/2	2x/2
	3.6	Tread, front	b_{10} (mm)	888	888	938	1058	1058	1058	1058	1068
	3.7	Tread, rear	b_{11} (mm)	897.5	897.5	897.5	960	960	960	960	960
Dimensions	4.1	Tilt of mast/fork carriage forward/backward	Grad	5/10	5/10	5/10	5/10	5/10	5/10	5/10	5/10
	4.2	Height, mast lowered	h_1 (mm)	1976	1976	1976	2006	2006	2006	2036	2186
	4.3	Free lift	h_2 (mm)	145	145	145	140	140	140	145	150
	4.4	Lift	h_3 (mm)	3000	3000	3000	3000	3000	3000	3000	3000
	4.5	Height, mast extended	h_4 (mm)	3955	3955	3955	4056	4056	4056	4152	4152
	4.7	Height of higher overhead guard(cabin) .	h_6 (mm)	2130	2130	2130	2155	2155	2190	2190	2190
	4.8	Seat height relating to SIP/stand height	h_7 (mm)	1045	1045	1045	1070	1070	1070	1070	1070
	4.12	Coupling height	h_{10} (mm)	275	275	275	303	303	303	303	303
	4.19	Overall length	l_1 (mm)	3018	3018	3023	3402	3402	3543	3575	3660
	4.20	Length to face of forks	l_2 (mm)	2098	2098	2103	2332	2332	2473	2505	2590
	4.21	Overall width	b_1 (mm)	1120	1120	1138	1265	1265	1265	1265	1302
	4.22	Fork dimensions ISO 2331	s/e/l (mm)	35/100/920	35/100/920	35/100/920	40/122/1070	40/122/1070	40/122/1070	45/125/1070	50/125/1070
	4.23	Fork carriage ISO 2328, class/type A,B		ISO2328 2A	ISO2328 2A	ISO2328 2A	ISO2328 2A	ISO2328 2A	ISO2328 2A	ISO2328 3A	ISO2328 3A
	4.24	Fork-carriage width	b_3 (mm)	1000	1000	1000	1038	1038	1038	1100	1100
	4.25	Distance between fork-arms	b_5(mm)	240/1000	240/1000	240/1000	260/1038	260/1038	260/1038	290/1100	290/1100
	4.31	Ground clearance, laden, below mast	m_1 (mm)	85	85	85	85	95	95	95	95
	4.32	Ground clearance, centre of wheelbase	m_2 (mm)	110	110	110	120	120	120	120	125
	4.33	Aisle width for pallets 1000 x 1200 crossways	Ast (mm)	3506	3506	3511	3738	3738	3878	3910	3995
	4.34	Aisle width for pallets 800 x 1200 crossways	Ast (mm)	3706	3706	3711	3938	3938	4078	4110	4195
	4.35	Turning radius	Wa (mm)	1900	1900	1900	2090	2090	2230	2230	2310
	4.36	Internal turning radius	b_{13} (mm)	620	620	680	730	730	730	730	730
Performance data	5.1	Travel speed, laden/unladen	km/h	14/14	14/14	13.5/14	14/14	14/14	14/14	14/14	12/13
	5.2	Lift speed, laden/unladen	mm/s	290/440	290/440	285/440	280/440	230/430	230/430	250/400	210/400
	5.3	Lowering speed, laden/unladen	mm/s	300/410	300/410	275/420	285/420	215/410	215/410	260/390	260/370
	5.5	Drawbar pull, laden/unladen	N	9000 /10000	9000 /10000	9500/11000	12000/12500	16000/17000	16000/17000	20000 /21000	20500/21000
	5.6	Max. Drawbar pull, laden/unladen	N	11000	11000	12000	14000	18000	18000	22000	23000
	5.7	Gradeability, laden/unladen	%	12/13	12/13	12/13	11/12	11/12	11/12	11/12	11/12
	5.8	Max. gradeability, laden/unladen	%	15/16	15/16	15/16	13/14	13/14	13/14	13/14	13/14
	5.9	Acceleration time, laden/unladen (0-10m)	s	5.3/5.0	5.3/5.0	5.3/5.1	5.2/4.6	5.3/4.7	5.3/5	5.3/5	5.5/5.2
	5.10	Service brake		Hydraulic	Hydraulic	Hydraulic	Hydraulic	Hydraulic	Hydraulic	Hydraulic	Hydraulic
	5.11	Parking brake		Mechanical	Mechanical	Mechanical	Mechanical	Mechanical	Mechanical	Mechanical	Mechanical
Electric engine	6.1	Drive motor rating S2 60 min	kW	8 AC	8 AC	8 AC	11 AC	11 AC	15AC	15AC	15 AC
	6.2	Lift motor rating at S3 15%	kW	8.2 DC	8.2 DC	8.2 DC	8.6 DC	8.6 DC	10 DC	10 DC	10 DC
	6.3	Battery acc. to DIN 43 531/35/36 A,B,C, no		no	no	no	no	no	no	no	no
	6.4	Battery voltage, nominal capacity K5	V/Ah	48/420	48/420	48/420	48/630	48/630	80/500	80/500	80/500
	6.5	Battery weight	kg	760	760	760	1050	1050	1405	1405	1405
	6.6	Battery dimensions	l/b/h(mm)	980×465×780	980×465×780	980×465×780	1028×570×780	1028×570×780	1028×710×780	1028×710×780	1028×710×780
	6.7	Energy consumption acc. to VDI cycle	kWh/h	4.4	4.4	4.6	5.0	5.8	5.8	6.5	6.7
	6.8	Min. battery weight	kg	700	700	700	930	930	1200	1200	1200
	6.9	Max. battery weight	kg	900	900	900	1200	1200	1550	1550	1550
Addition data	8.1	Manufacturer of controler		CURTIS	CURTIS	CURTIS	CURTIS	CURTIS	CURTIS	CURTIS	CURTIS
	8.2	Operating pressure for attachments	bar	145	145	145	175	175	175	175	175
	8.3	Oil volume for attachments	l/min	65	65	65	65	65	65	65	65
	8.4	Sound level at the driver´s ear according to EN / DIN 12 053	dB (A)	72	72	73	73	74	74	74	74
	8.5	Towing coupling, type DIN 15170		Φ24 Pin	Φ24 Pin	Φ24 Pin	Φ24 Pin	Φ24 Pin	Φ24 Pin	Φ24 Pin	Φ24 Pin

AC3: means Curtis AC traveling system with DC Pump system, semi-AC system

A Series 1.0-3.5t Electric Forklift Specification

Distinguishing mark	1.1	Manufacturer		HANGCHA GROUP CO.,LTD.							
	1.2	Manufacturers type designation		CPD10-AC4	CPD15-AC4	CPD18-AC4	CPD20-AC4	CPD25-AC4	CPD25-ALC4	CPD30-AC4	CPD35-AC4
	1.3	Drive: electric (battery or mains), diesel, petrol, fuel gas		electric	electric	electric	electric	electric	electric	electric	electric
	1.4	Operator type: hand, pedestrian, standing, seated, order-picker		seated	seated	seated	seated	seated	seated	seated	seated
	1.5	Load capacity/rated load	Q (kg)	1000	1500	1800	2000	2500	2500	3000	3500
	1.6	Load centre distance	c (mm)	500	500	500	500	500	500	500	500
	1.8	Load distance, centre of drive axle to fork	x (mm)	406	406	411	448	448	448	480	485
	1.9	Wheelbase	y (mm)	1380	1380	1380	1485	1485	1625	1625	1625
Weight	2.1	Service Weight	kg	2940	2940	3090	3880	4180	4380	4850	5300
	2.2	Axle loading, laden front/rear	kg	3120/820	3900/540	4300/590	5196/684	5920/760	6140/740	7060/790	7950/850
	2.3	Axle loading, unladen front/rear	kg	1353/1587	1353/1587	1440/1650	1728/2152	1780/2400	1930/2450	2324/2526	2380/2920
Tyres, chassis	3.1	Tyres: solid rubber, superelastic, pneumatic, polyurethane		pneumatic	pneumatic	pneumatic	pneumatic	pneumatic	pneumatic	pneumatic	super elastic
	3.2	Tyre size, front		6.00 - 9	6.00 - 9	21x8 - 9	23x9 - 10	23x9 - 10	23x9 - 10	23x9 - 10	23x10 - 12
	3.3	Tyre size, rear		5.00 - 8	5.00 - 8	5.00 - 8	18x7 - 8	18x7 - 8	18x7 - 8	18x7 - 8	200/50-10
	3.5	Wheels, number front rear (x = driven wheels)		2x/2	2x/2	2x/2	2x/2	2x/2	2x/2	2x/2	2x/2
	3.6	Tread, front	b_{10} (mm)	888	888	938	1058	1058	1058	1058	1068
	3.7	Tread, rear	b_{11} (mm)	897.5	897.5	897.5	960	960	960	960	960
Dimensions	4.1	Tilt of mast/fork carriage forward/backward	Grad	5/10	5/10	5/10	5/10	5/10	5/10	5/10	5/10
	4.2	Height, mast lowered	h_1 (mm)	1976	1976	1976	2006	2006	2006	2036	2186
	4.3	Free lift	h_2 (mm)	145	145	145	140	140	140	145	150
	4.4	Lift	h_3 (mm)	3000	3000	3000	3000	3000	3000	3000	3000
	4.5	Height, mast extended	h_4 (mm)	3955	3955	3955	4056	4056	4056	4152	4152
	4.7	Height of higher overhead guard(cabin) .	h_6 (mm)	2130	2130	2130	2155	2155	2190	2190	2190
	4.8	Seat height relating to SIP/stand height	h_7 (mm)	1045	1045	1045	1070	1070	1070	1070	1070
	4.12	Coupling height	h_{10} (mm)	275	275	275	303	303	303	303	303
	4.19	Overall length	l_1 (mm)	3018	3018	3023	3402	3402	3543	3575	3660
	4.20	Length to face of forks	l_2 (mm)	2098	2098	2103	2332	2332	2473	2505	2590
	4.21	Overall width	b_1 (mm)	1120	1120	1138	1265	1265	1265	1265	1302
	4.22	Fork dimensions ISO 2331	s/e/l (mm)	35/100/920	35/100/920	35/100/920	40/122/1070	40/122/1070	40/122/1070	45/125/1070	50/125/1070
	4.23	Fork carriage ISO 2328, class/type A,B		ISO2328 2A	ISO2328 2A	ISO2328 2A	ISO2328 2A	ISO2328 2A	ISO2328 2A	ISO2328 3A	ISO2328 3A
	4.24	Fork-carriage width	b_3 (mm)	1000	1000	1000	1038	1038	1038	1100	1100
	4.25	Distance between fork-arms	b_5(mm)	240/1000	240/1000	240/1000	260/1038	260/1038	260/1038	290/1100	290/1100
	4.31	Ground clearance, laden, below mast	m_1 (mm)	85	85	85	85	95	95	95	95
	4.32	Ground clearance, centre of wheelbase	m_2 (mm)	110	110	110	120	120	120	120	125
	4.33	Aisle width for pallets 1000 x 1200 crossways	Ast (mm)	3506	3506	3511	3738	3738	3878	3910	3995
	4.34	Aisle width for pallets 800 x 1200 crossways	Ast (mm)	3706	3706	3711	3938	3938	4078	4110	4195
	4.35	Turning radius	Wa (mm)	1900	1900	1900	2090	2090	2230	2230	2310
	4.36	Internal turning radius	b_{13} (mm)	620	620	680	730	730	730	730	730
Performance data	5.1	Travel speed, laden/unladen	km/h	14/14	14/14	13.5/14	14/14	14/14	14/14	14/14	12/13
	5.2	Lift speed, laden/unladen	mm/s	290/440	290/440	285/440	280/440	230/430	230/430	250/400	210/400
	5.3	Lowering speed, laden/unladen	mm/s	300/410	300/410	275/420	285/420	215/410	215/410	260/390	260/370
	5.5	Drawbar pull, laden/unladen	N	9000 /10000	9000 /10000	9500/11000	12000/12500	16000/17000	16000/17000	20000 /21000	20500/21000
	5.6	Max. Drawbar pull, laden/unladen	N	11000	11000	12000	14000	18000	18000	22000	23000
	5.7	Gradeability, laden/unladen	%	12/13	12/13	12/13	11/12	11/12	11/12	11/12	11/12
	5.8	Max. gradeability, laden/unladen	%	15/16	15/16	15/16	13/14	13/14	13/14	13/14	13/14
	5.9	Acceleration time, laden/unladen (0-10m)	s	5.3/5.0	5.3/5.0	5.3/5.1	5.2/4.6	5.3/4.7	5.3/5	5.3/5	5.5/5.2
	5.10	Service brake		Hydraulic	Hydraulic	Hydraulic	Hydraulic	Hydraulic	Hydraulic	Hydraulic	Hydraulic
	5.11	Parking brake		Mechanical	Mechanical	Mechanical	Mechanical	Mechanical	Mechanical	Mechanical	Mechanical
Electric engine	6.1	Drive motor rating S2 60 min	kW	8 AC	8 AC	8 AC	11 AC	11 AC	15AC	15AC	15 AC
	6.2	Lift motor rating at S3 15%	kW	8.6 AC	8.6 AC	8.6 AC	8.6 AC	8.6 AC	10 AC	10 AC	10 AC
	6.3	Battery acc. to DIN 43 531/35/36 A,B,C, no		no	no	no	no	no	no	no	no
	6.4	Battery voltage, nominal capacity K5	V/Ah	48/420	48/420	48/420	48/630	48/630	80/500	80/500	80/500
	6.5	Battery weight	kg	760	760	760	1050	1050	1405	1405	1405
	6.6	Battery dimensions	l/b/h(mm)	980×465×780	980×465×780	980×465×780	1028×570×780	1028×570×780	1028×710×780	1028×710×780	1028×710×780
	6.7	Energy consumption acc. to VDI cycle	kWh/h	4.4	4.4	4.6	5.0	5.8	5.8	6.5	6.7
	6.8	Min. battery weight	kg	700	700	700	930	930	1200	1200	1200
	6.9	Max. battery weight	kg	900	900	900	1200	1200	1550	1550	1550
Addition data	8.1	Manufacturer of controler		CURTIS	CURTIS	CURTIS	CURTIS	CURTIS	CURTIS	CURTIS	CURTIS
	8.2	Operating pressure for attachments	bar	145	145	145	175	175	175	175	175
	8.3	Oil volume for attachments	l/min	65	65	65	65	65	65	65	65
	8.4	Sound level at the driver´s ear according to EN / DIN 12 053	dB (A)	72	72	73	73	74	74	74	74
	8.5	Towing coupling, type DIN 15170		Φ24 Pin	Φ24 Pin	Φ24 Pin	Φ24 Pin	Φ24 Pin	Φ24 Pin	Φ24 Pin	Φ24 Pin

AC4: means Curtis AC traveling system with AC Pump system, full-AC system

A Series 1.0-3.5t Electric Forklift Specification

Distinguishing mark	1.1	Manufacturer		HANGCHA GROUP CO.,LTD.							
	1.2	Manufacturers type designation		CPD10-AD2	CPD15-AD2	CPD18-AD2	CPD20-AD2	CPD25-AD2	CPD25-ALD2	CPD30-AD2	CPD35-AD2
	1.3	Drive: electric (battery or mains), diesel, petrol, fuel gas		electric	electric	electric	electric	electric	electric	electric	electric
	1.4	Operator type: hand, pedestrian, standing, seated, order-picker		seated	seated	seated	seated	seated	seated	seated	seated
	1.5	Load capacity/rated load	Q (kg)	1000	1500	1800	2000	2500	2500	3000	3500
	1.6	Load centre distance	c (mm)	500	500	500	500	500	500	500	500
	1.8	Load distance, centre of drive axle to fork	x (mm)	406	406	411	448	448	448	480	485
	1.9	Wheelbase	y (mm)	1380	1380	1380	1485	1485	1625	1625	1625
Weight	2.1	Service Weight	kg	2940	2940	3090	3880	4180	4380	4850	5300
	2.2	Axle loading, laden front/rear	kg	3120/820	3900/540	4300/590	5196/684	5920/760	6140/740	7060/790	7950/850
	2.3	Axle loading, unladen front/rear	kg	1353/1587	1353/1587	1440/1650	1728/2152	1780/2400	1930/2450	2324/2526	2380/2920
Tyres, chassis	3.1	Tyres: solid rubber, superelastic, pneumatic, polyurethane		pneumatic	pneumatic	pneumatic	pneumatic	pneumatic	pneumatic	pneumatic	super elastic
	3.2	Tyre size, front		6.00 - 9	6.00 - 9	21x8 - 9	23x9 - 10	23x9 - 10	23x9 - 10	23x9 - 10	23x10 - 12
	3.3	Tyre size, rear		5.00 - 8	5.00 - 8	5.00 - 8	18x7 - 8	18x7 - 8	18x7 - 8	18x7 - 8	200/50-10
	3.5	Wheels, number front rear (x = driven wheels)		2x/2	2x/2	2x/2	2x/2	2x/2	2x/2	2x/2	2x/2
	3.6	Tread, front	b_{10} (mm)	888	888	938	1058	1058	1058	1058	1068
	3.7	Tread, rear	b_{11} (mm)	897.5	897.5	897.5	960	960	960	960	960
Dimensions	4.1	Tilt of mast/fork carriage forward/backward	Grad	5/10	5/10	5/10	5/10	5/10	5/10	5/10	5/10
	4.2	Height, mast lowered	h_1 (mm)	1976	1976	1976	2006	2006	2006	2036	2186
	4.3	Free lift	h_2 (mm)	145	145	145	140	140	140	145	150
	4.4	Lift	h_3 (mm)	3000	3000	3000	3000	3000	3000	3000	3000
	4.5	Height, mast extended	h_4 (mm)	3955	3955	3955	4056	4056	4056	4152	4152
	4.7	Height of higher overhead guard(cabin) .	h_6 (mm)	2130	2130	2130	2155	2155	2190	2190	2190
	4.8	Seat height relating to SIP/stand height	h_7 (mm)	1045	1045	1045	1070	1070	1070	1070	1070
	4.12	Coupling height	h_{10} (mm)	275	275	275	303	303	303	303	303
	4.19	Overall length	l_1 (mm)	3018	3018	3023	3402	3402	3543	3575	3660
	4.20	Length to face of forks	l_2 (mm)	2098	2098	2103	2332	2332	2473	2505	2590
	4.21	Overall width	b_1 (mm)	1120	1120	1138	1265	1265	1265	1265	1302
	4.22	Fork dimensions ISO 2331	s/e/l (mm)	35/100/920	35/100/920	35/100/920	40/122/1070	40/122/1070	40/122/1070	45/125/1070	50/125/1070
	4.23	Fork carriage ISO 2328, class/type A,B		ISO2328 2A	ISO2328 2A	ISO2328 2A	ISO2328 2A	ISO2328 2A	ISO2328 2A	ISO2328 3A	ISO2328 3A
	4.24	Fork-carriage width	b_3 (mm)	1000	1000	1000	1038	1038	1038	1100	1100
	4.25	Distance between fork-arms	b_5(mm)	240/1000	240/1000	240/1000	260/1038	260/1038	260/1038	290/1100	290/1100
	4.31	Ground clearance, laden, below mast	m_1 (mm)	85	85	85	85	95	95	95	95
	4.32	Ground clearance, centre of wheelbase	m_2 (mm)	110	110	110	120	120	120	120	125
	4.33	Aisle width for pallets 1000 x 1200 crossways	Ast (mm)	3506	3506	3511	3738	3738	3878	3910	3995
	4.34	Aisle width for pallets 800 x 1200 crossways	Ast (mm)	3706	3706	3711	3938	3938	4078	4110	4195
	4.35	Turning radius	W_a (mm)	1900	1900	1900	2090	2090	2230	2230	2310
	4.36	Internal turning radius	b_{13} (mm)	620	620	680	730	730	730	730	730
Performance data	5.1	Travel speed, laden/unladen	km/h	14/14	14/14	13.5/14	14/14	14/14	14/14	14/14	12/13
	5.2	Lift speed, laden/unladen	mm/s	290/440	290/440	285/440	280/440	230/430	230/430	250/400	210/400
	5.3	Lowering speed, laden/unladen	mm/s	300/410	300/410	275/420	285/420	215/410	215/410	260/390	260/370
	5.5	Drawbar pull, laden/unladen	N	9000 /10000	9000 /10000	9500/11000	12000/12500	16000/17000	16000/17000	20000 /21000	20500/21000
	5.6	Max. Drawbar pull, laden/unladen	N	11000	11000	12000	14000	18000	18000	22000	23000
	5.7	Gradeability, laden/unladen	%	12/13	12/13	12/13	11/12	11/12	11/12	11/12	11/12
	5.8	Max. gradeability, laden/unladen	%	15/16	15/16	15/16	13/14	13/14	13/14	13/14	13/14
	5.9	Acceleration time, laden/unladen (0-10m)	s	5.3/5.0	5.3/5.0	5.3/5.1	5.2/4.6	5.3/4.7	5.3/5	5.3/5	5.5/5.2
	5.10	Service brake		Hydraulic	Hydraulic	Hydraulic	Hydraulic	Hydraulic	Hydraulic	Hydraulic	Hydraulic
	5.11	Parking brake		Mechanical	Mechanical	Mechanical	Mechanical	Mechanical	Mechanical	Mechanical	Mechanical
Electric engine	6.1	Drive motor rating S2 60 min	kW	8 AC	8 AC	8 AC	11 AC	11 AC	15AC	15AC	15 AC
	6.2	Lift motor rating at S3 15%	kW	8.6 AC	8.6 AC	8.6 AC	8.6 AC	8.6 AC	10 AC	10 AC	10 AC
	6.3	Battery acc. to DIN 43 531/35/36 A,B,C, no		no	no	no	no	no	no	no	no
	6.4	Battery voltage, nominal capacity K5	V/Ah	48/420	48/420	48/420	48/630	48/630	80/500	80/500	80/500
	6.5	Battery weight	kg	760	760	760	1050	1050	1405	1405	1405
	6.6	Battery dimensions	l/b/h(mm)	980×465×780	980×465×780	980×465×780	1028×570×780	1028×570×780	1028×710×780	1028×710×780	1028×710×780
	6.7	Energy consumption acc. to VDI cycle	kWh/h	4.4	4.4	4.6	5.0	5.8	5.8	6.5	6.7
	6.8	Min. battery weight	kg	700	700	700	930	930	1200	1200	1200
	6.9	Max. battery weight	kg	900	900	900	1200	1200	1550	1550	1550
Addition data	8.1	Manufacturer of controler		Inmotion	Inmotion	Inmotion	Inmotion	Inmotion	Inmotion	Inmotion	Inmotion
	8.2	Operating pressure for attachments	bar	145	145	145	175	175	175	175	175
	8.3	Oil volume for attachments	l/min	65	65	65	65	65	65	65	65
	8.4	Sound level at the driver´s ear according to EN / DIN 12 053	dB (A)	72	72	73	73	74	74	74	74
	8.5	Towing coupling, type DIN 15170		Φ24 Pin	Φ24 Pin	Φ24 Pin	Φ24 Pin	Φ24 Pin	Φ24 Pin	Φ24 Pin	Φ24 Pin

AD2: means Inmotion AC traveling system with AC Pump system, full-AC system

A series 1.0t/1.5t/1.8t/2.0t mast specification

Type	Model	Lifting height	Lowered height	Extended height		Free lifting height				Tilting range		Capacity (Mast vertical to ground)					
				With backrest	Without backrest	With backrest		Without backrest		Forward	Backward	Load center@500mm Single Tire			Load center@500mm Front Dual Tire		
						1.0/1.5/1.8t	small2.0t	1.0/1.5/1.8t	small2.0t			1.0t	1.5t	1.8t	1.0t	1.5t	1.8t
		mm	mm	mm	mm	mm	mm	mm	mm	(°)	(°)	kg	kg	kg	kg	kg	kg
2-stage wide view mast	M250	2500	1726	3455	3063	145	150	145	150	5	6	1000	1500	1800	1000	1500	1800
	M270	2700	1826	3655	3263	145	150	145	150	5	6	1000	1500	1800	1000	1500	1800
	M300	3000	1976	3955	3563	145	150	145	150	5	10	1000	1500	1800	1000	1500	1800
	M330	3300	2126	4255	3863	145	150	145	150	5	10	1000	1500	1800	1000	1500	1800
	M350	3500	2226	4455	4063	145	150	145	150	5	10	1000	1500	1800	1000	1500	1800
	M360	3600	2326	4555	4163	145	150	145	150	5	10	1000	1500	1800	1000	1500	1800
	M400	4000	2576	4955	4563	145	150	145	150	5	10	1000	1500	1800	1000	1500	1800
	M430	4300	2726	5255	4863	145	150	145	150	5	6	1000	1500	1700	1000	1500	1800
	M450	4500	2826	5455	5063	145	150	145	150	5	6	1000	1500	1650	1000	1500	1700
2-stage full-free lifting mast	U250	2500	1726	3455	3095	781	781	1141	1141	5	6	1000	1500	1800	1000	1500	1800
	U270	2700	1826	3655	3295	881	881	1241	1241	5	6	1000	1500	1800	1000	1500	1800
	U300	3000	1976	3955	3595	1031	1031	1391	1391	5	10	1000	1500	1800	1000	1500	1800
	U330	3300	2126	4255	3895	1181	1181	1541	1541	5	10	1000	1500	1800	1000	1500	1800
	U360	3600	2276	4555	4195	1331	1331	1691	1691	5	10	1000	1500	1800	1000	1500	1800
	U400	4000	2526	4955	4595	1581	1581	1941	1941	5	10	1000	1500	1800	1000	1500	1800
3-stage full-free lifting mast	N400	4000	1976	4955	4736	1031	1031	1250	1250	5	6	1000	1500	1750	1000	1500	1800
	N430	4300	2076	5255	5036	1131	1131	1350	1350	5	6	1000	1500	1650	1000	1500	1750
	N450	4500	2086	5465	5105	1141	1141	1501	1501	5	6	1000	1500	1650	1000	1500	1750
	N480	4800	2201	5755	5411	1256	1256	1600	1600	5	6	1000	1400	1600	1000	1500	1700
	N500	5000	2251	5955	5595	1306	1306	1666	1666	5	6	1000	1400	1550	1000	1500	1600
	N550	5500	2426	6455	6095	1481	1481	1841	1841	3	6	1000	1250	1500	1000	1350	1600
	N600	6000	2651	6955	6661	1706	1706	2000	2000	3	6	1000	1100	1300	1000	1200	1400
	N650	6500	2816	7455	7126	1871	1871	2200	2200	3	6	900	900	1150	1000	1000	1200

A series 2.0t/2.5t/2.5tLW mast specification

Type	Model	Lifting height	Lowered height	Extended height		Free lifting height		Tilting range		Capacity (Mast vertical to ground)			
				With backrest	Without backrest	With backrest	Without backrest	Forward	Backward	Load center@500mm Single Tire		Load center@500mm Front Dual Tire	
										2.0t	2.5t/2.5LW	2.0t	2.5t/2.5LW
		mm	mm	mm	mm	mm	mm	(°)	(°)	kg	kg	kg	kg
2-stage wide view mast	M250	2500	1756	3556	3151	140	140	5	6	2000	2500	2000	2500
	M270	2700	1856	3756	3351	140	140	5	6	2000	2500	2000	2500
	M300	3000	2006	4056	3651	140	140	5	10	2000	2500	2000	2500
	M330	3300	2171	4386	3981	140	140	5	10	2000	2500	2000	2500
	M350	3500	2256	4556	4151	140	140	5	10	2000	2500	2000	2500
	M360	3600	2306	4656	4251	140	140	5	10	2000	2500	2000	2500
	M400	4000	2556	5056	4651	140	140	5	10	2000	2500	2000	2500
	M430	4300	2731	5376	4971	140	140	5	6	2000	2500	2000	2500
	M450	4500	2831	5556	5151	140	140	5	6	2000	2450	2000	2500
2-stage full-free lifting mast	U250	2500	1781	3546	3132	735	1149	5	6	2000	2500	2000	2500
	U270	2700	1881	3746	3332	835	1249	5	6	2000	2500	2000	2500
	U300	3000	1981	4046	3632	935	1349	5	10	2000	2500	2000	2500
	U330	3300	2131	4346	3932	1085	1499	5	10	2000	2500	2000	2500
	U360	3600	2281	4646	4232	1235	1649	5	10	2000	2500	2000	2500
	U400	4000	2531	5046	4632	1485	1899	5	10	2000	2500	2000	2500
3-stage full-free lifting mast	N400	4000	1926	5056	4680	880	1256	5	6	2000	2500	2000	2500
	N430	4300	2026	5356	4980	980	1356	5	6	2000	2450	2000	2500
	N450	4500	2096	5606	5230	1050	1426	5	6	2000	2350	2000	2450
	N480	4800	2196	5856	5480	1150	1526	5	6	1950	2250	2000	2350
	N500	5000	2261	6056	5680	1215	1591	5	6	1850	2150	1950	2250
	N550	5500	2426	6556	6180	1380	1756	3	6	1750	2050	1900	2100
	N600	6000	2646	7066	6690	1600	1976	3	6	1550	1850	1800	1950
	N650	6500	2821	7556	7180	1775	2151	3	6	1300	1600	1550	1800

A series 3.0t/3.5t mast specification

Type	Model	Lifting height	Lowered height		Extended height				Free lifting height				Tilting range		Capacity (Mast vertical to ground)			
					With backrest		Without backrest		With backrest		Without backrest		Forward	Backward	Load center@500mm Single Tire		Load center@500mm Front Dual Tire	
			3.0t	3.5t	3.0t	3.5t	3.0t	3.5t	3.0t	3.5t	3.0t	3.5t			3.0t	3.5t	3.0t	3.5t
		mm	mm	mm	mm	mm	mm	mm	mm	mm	mm	mm	(°)	(°)	kg	kg	kg	kg
2-stage wide view mast	M250	2500	1786	1936	3652	3652	3213	3288	145	150	145	150	5	6	3000	3500	3000	3500
	M270	2700	1886	2036	3852	3852	3413	3488	145	150	145	150	5	6	3000	3500	3000	3500
	M300	3000	2036	2186	4152	4152	3713	3788	145	150	145	150	5	10	3000	3500	3000	3500
	M330	3300	2186	2336	4452	4452	4013	4088	145	150	145	150	5	10	3000	3500	3000	3500
	M350	3500	2286	2436	4652	4652	4213	4288	145	150	145	150	5	10	3000	3500	3000	3500
	M360	3600	2336	2486	4752	4752	4313	4388	145	150	145	150	5	10	3000	3500	3000	3500
	M400	4000	2586	2686	5152	5152	4713	4788	145	150	145	150	5	10	3000	3500	3000	3500
	M430	4300	2761	2836	5472	5452	5033	5088	145	150	145	150	5	6	3000	3400	3000	3500
	M450	4500	2861	2936	5652	5652	5213	5288	145	150	145	150	5	6	3000	3300	3000	3400
2-stage full-free lifting mast	U250	2500	1826	1936	3642	3652	3211	3296	684	794	1115	1150	5	6	3000	3500	3000	3500
	U270	2700	1926	2036	3842	3852	3411	3496	784	894	1215	1250	5	6	3000	3500	3000	3500
	U300	3000	2036	2136	4152	4142	3721	3786	894	994	1325	1350	5	10	3000	3500	3000	3500
	U330	3300	2186	2336	4452	4452	4021	4096	1044	1194	1475	1550	5	10	3000	3500	3000	3500
	U360	3600	2336	2495	4752	4752	4321	4396	1194	1353	1625	1709	5	10	3000	3500	3000	3500
	U400	4000	2536	2695	5152	5152	4721	4796	1394	1553	1825	1909	5	10	3000	3500	3000	3500
3-stage full-free lifting mast	N400	4000	1951	2051	5152	5152	4781	4856	809	909	1180	1205	5	6	3000	3400	3000	3500
	N430	4300	2051	2151	5452	5452	5081	5156	909	1009	1280	1305	5	6	3000	3300	3000	3400
	N450	4500	2121	2221	5706	5652	5335	5356	979	1079	1350	1375	5	6	3000	3200	3000	3300
	N480	4800	2221	2321	5952	5952	5581	5656	1079	1179	1450	1475	5	6	2900	3100	2950	3200
	N500	5000	2287	2387	6152	6152	5781	5856	1145	1245	1516	1541	5	6	2850	3100	2900	3200
	N550	5500	2451	2551	6652	6652	6281	6356	1309	1409	1680	1705	3	6	2670	3000	2750	3100
	N600	6000	2671	2717	7160	7152	6789	6856	1529	1575	1900	1871	3	6	2350	2650	2500	2800
	N650	6500	2846	2946	7652	7652	7281	7356	1704	1804	2075	2100	3	6	2000	2250	2200	2400

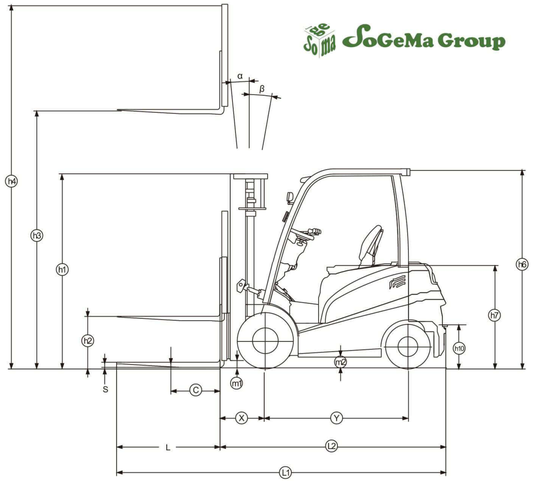

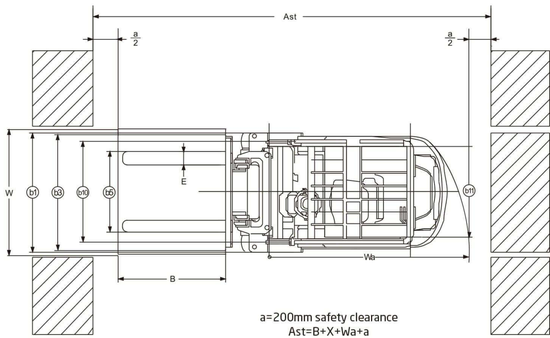

a=200mm safety clearance
Ast=B+X+Wa+a

X: Load distance
B: Length of load or forks which is longer

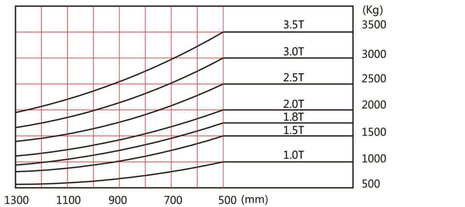

Standard Features	Options
/ High efficiency AC driving motor	/ Side way battery change (Using pallet truck or trolley)
/ Special for truk's lifting motor	/ Big capacity Chinese made battery
/ Multi-functions dashboard	/ Cold store application
/ Full electronic controlled travelling, lifting and steering	/ High performance import battery
/ Front lighting system, turning indicator, LED combined three colors's rear lights	/ Battery charger
/ Big dimension rubber pad	/ Rear lighting system
/ Sheet meatl stamping made front and rear bottom plate	/ Front dual tyre
/ Sheet metal stamping made left and right cover and battery cover	/ SE tyre
/ Reversing beeper	/ Non-marking tyre
/ Full hydraulic steering	/ Suspension seat with higher OHG
/ Storage box	/ Left and right rear view mirror
/ Soft landing system	/ Reversing hand grip with horn button
/ Standard forks in red	/ Wide fork carriage
/ 3m duplex wide view mast	/ Wide or higher load backrest
/ Tow coupling	/ Other dimension forks
/ Center located rear view mirror	/ Duplex mast with full free lift
	/ Triplex mast
	/ Integrated side shift
	/ Other attachments
	/ OPS
	/ Blue spot light
	/ Other specification on demand

SoGeMa Group

Sogema Group s.r.l.

46037 Roncoferraro (Mn)

Tel: +39 0376/270758

shop@sogemastore.it
www.sogemastore.it
www.sogemagroup.it

Follow us on Instagram

Follow us on Facebook

Follow us on YouTube

Download "Hangcha Forklift" App

ISO14001:2015

ISO9001:2015

HANGCHA trucks conform to the European Safety Requirements.

HANGCHA GROUP CO., LTD. reserves the right to make any changes without notice concerning colors, equipment, or specifications detailed in this brochure, or to discontinue individual models. The colors of trucks, delivered may differ slightly from those in brochures.

2021 VERSION 1/COPYRIGHT 2021/04

A Series Electric Forklift Truck

with capacities of 1,000 to 3,500kg

The World of Hangcha

HANGCHA